Types of Cranes Requiring Certified Crane Operators

Yes = requiring certified crane operator

Wheel-mounted Mobile Cranes			
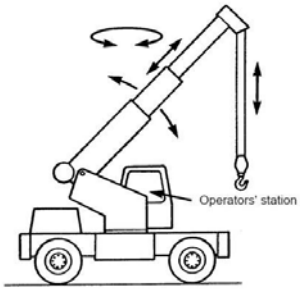		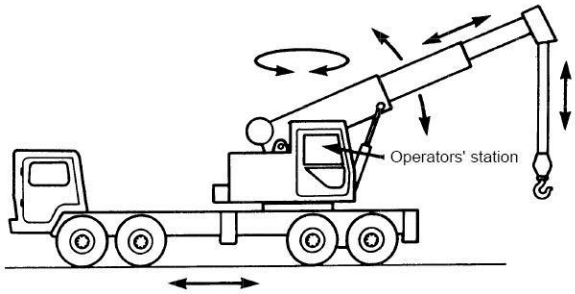	
Telescoping Boom-Single Control	Yes	Telescoping Boom-Multi Control	Yes
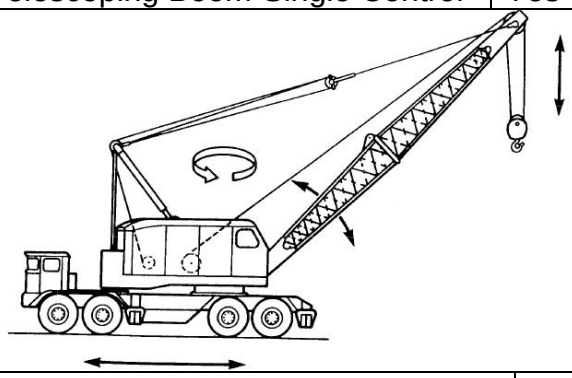		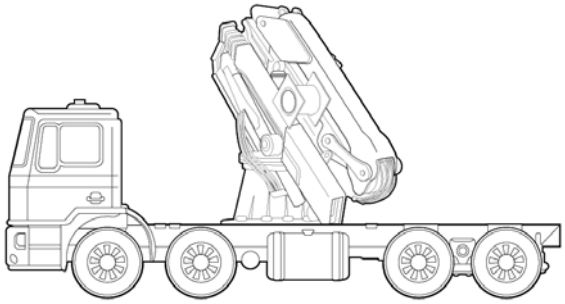	
Latticework Boom Multi Control	Yes	Knuckle Boom	Yes
Commercial Truck-mounted Crane			
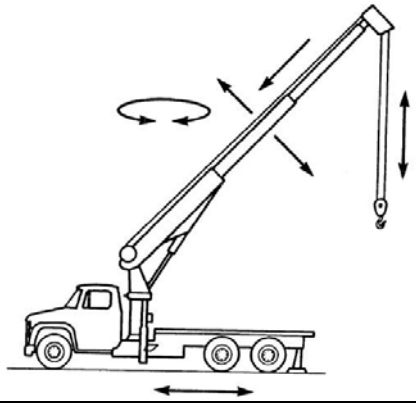		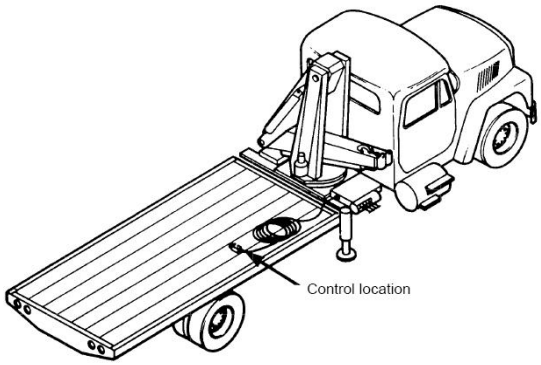	
Hydraulic Boom	Yes	Articulated Boom	Yes
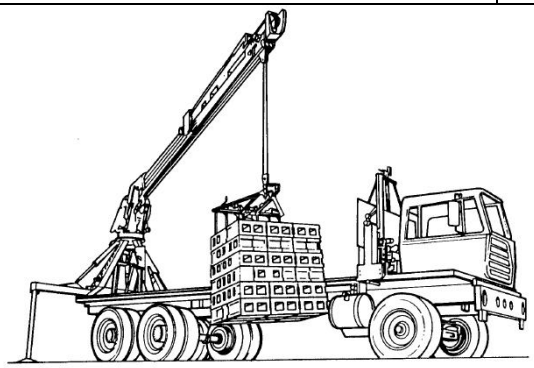		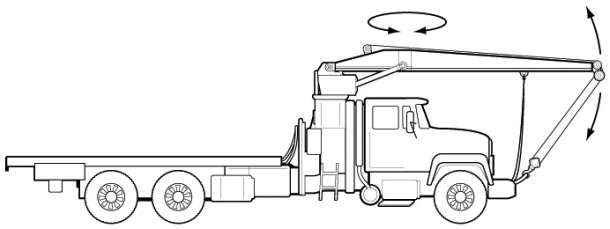	
Trolley Boom	Yes	Stiff Boom	Yes

Yes = requiring certified crane operator

Crawler Cranes			
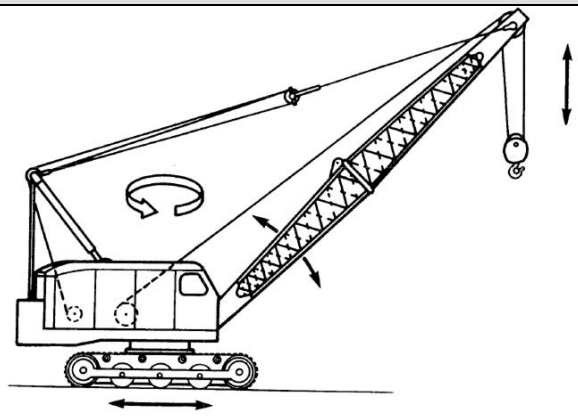		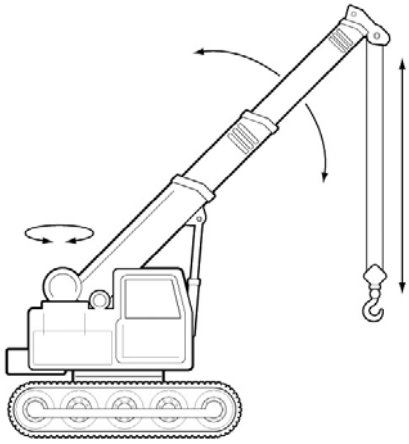	
Latticework Boom	Yes	Hydraulic Boom	Yes
Monorails & Underhung Cranes			
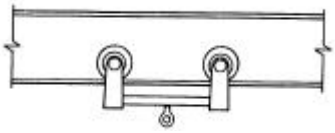		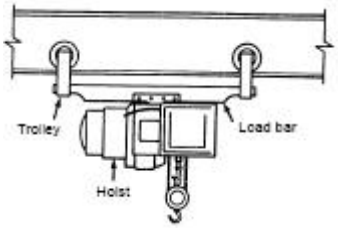	
Monorail Carrier	No	Power Operated Hoist	No
Electric Hoist	No		
Straddle Crane		**Stiff-leg Derrick**	
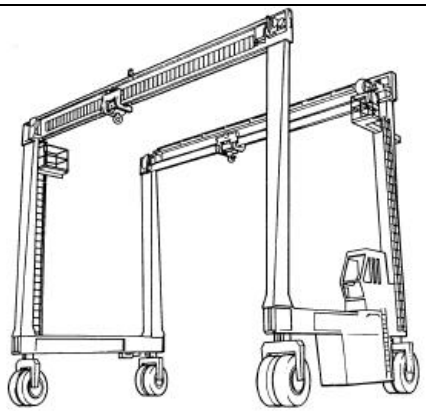		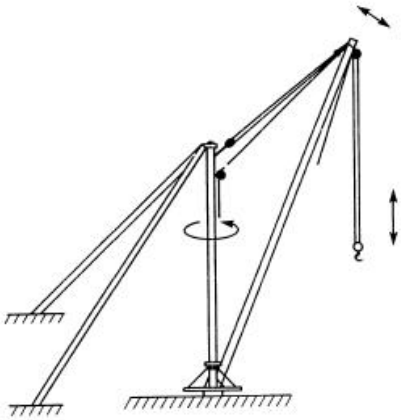	
Straddle Crane	No	Stiff-leg Derrick	No

Yes = requiring certified crane operator

Overhead Track-mounted Cranes			
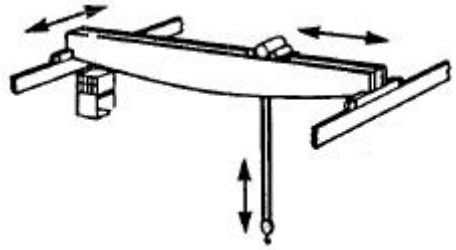		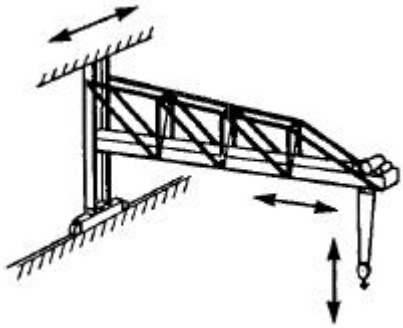	
Overhead Traveling	No	Wall	No
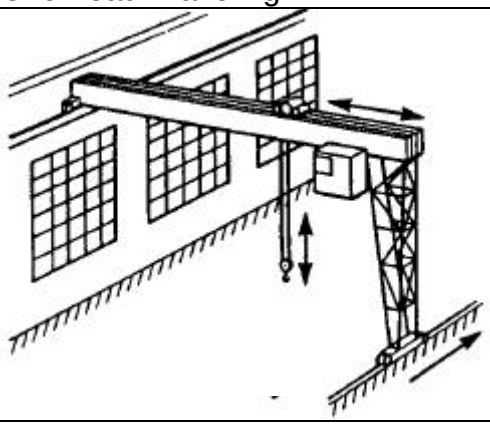		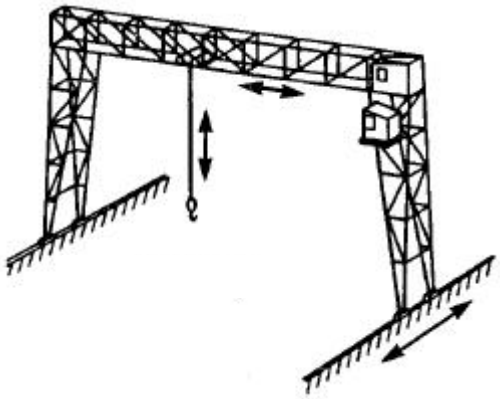	
Semi-Gantry	No	Gantry	No
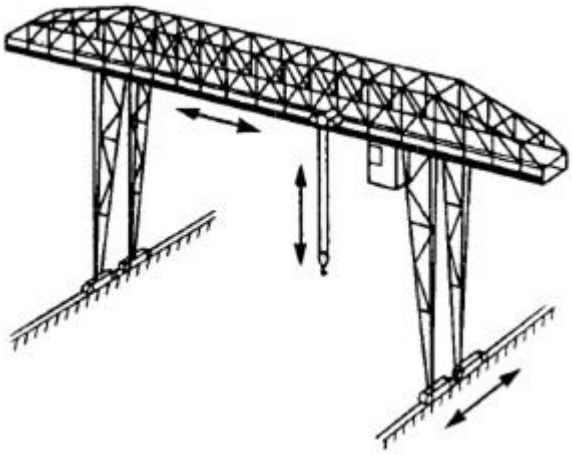		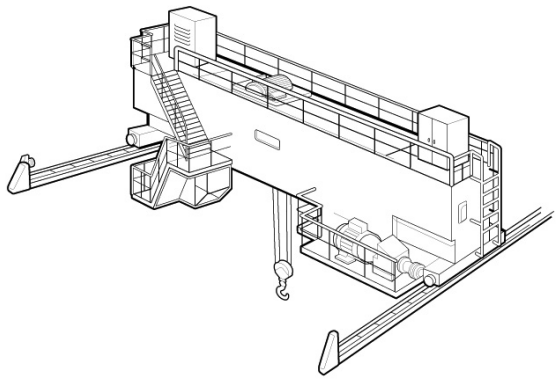	
Cantilever Gantry	No	Bridge Crane	No
Side Boom			
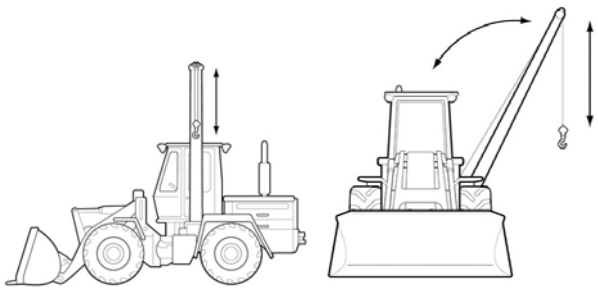		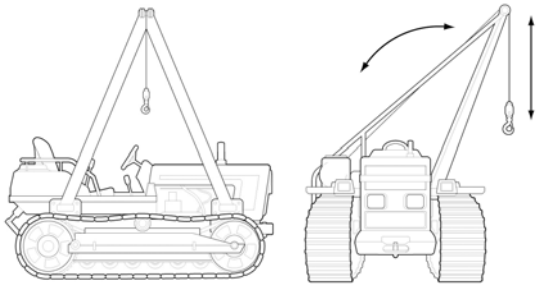	
Side Boom -wheeled	No	Side Boom- Tracked	No

Yes = requiring certified crane operator

Tower Cranes			
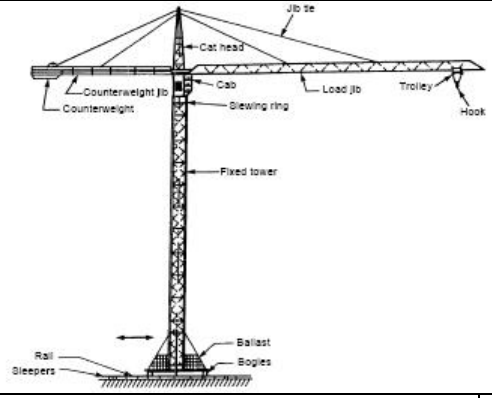		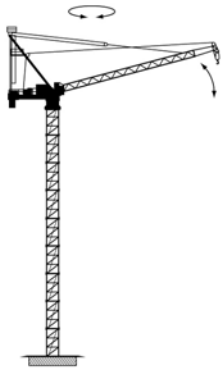	
Saddle Jib	Yes	Luffing Jib	Yes
Self-erecting Tower Cranes			
		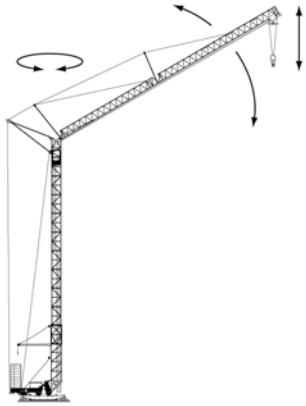	
Telescoping	Yes	Inner & outer tower	Yes
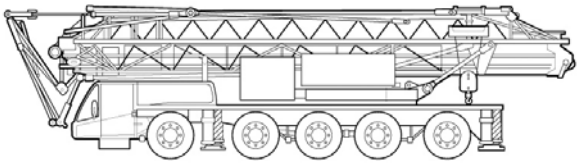		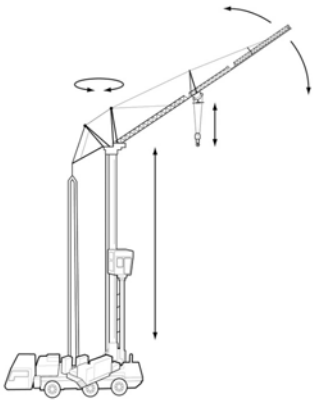	
Truck mounted self-erecting tower with operator cab			Yes
		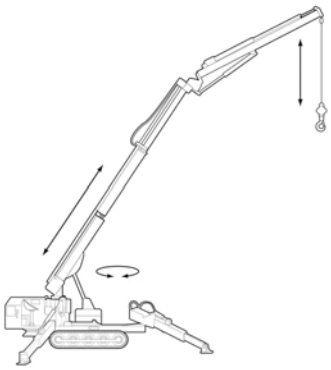	
		Mini-crawler – capacity. 2-4 tons	No